INSTALLATION DRAWINGS FOR THE UDA50A SHIELDED CABLE & HARDWARE kit

This package contains the drawings that show how to install the UDA50A Shielded Cable per ECO # UDA50-CX004. The Hardware kit has been changed as a result of the ECO and those changes are also included in this package. This information is not shown in the UDA50 USER GUIDE and is intended as an aid to Field Service during installation.

CTL #: 1664	ECO No: UDA50-CX004
EEEEEE CCCCC 0000	
E C 0 0	d i s i t a l
EEEE C 0 0	
E C 0 0	
EEEEEE CCCCC 0000	ENGINEERING CHANGE ORDER

ADAPTER, UNIBUS DISK
D-UA-UDA50-0-0
SHEET 1 of 1
ZONES: C,D-7,8

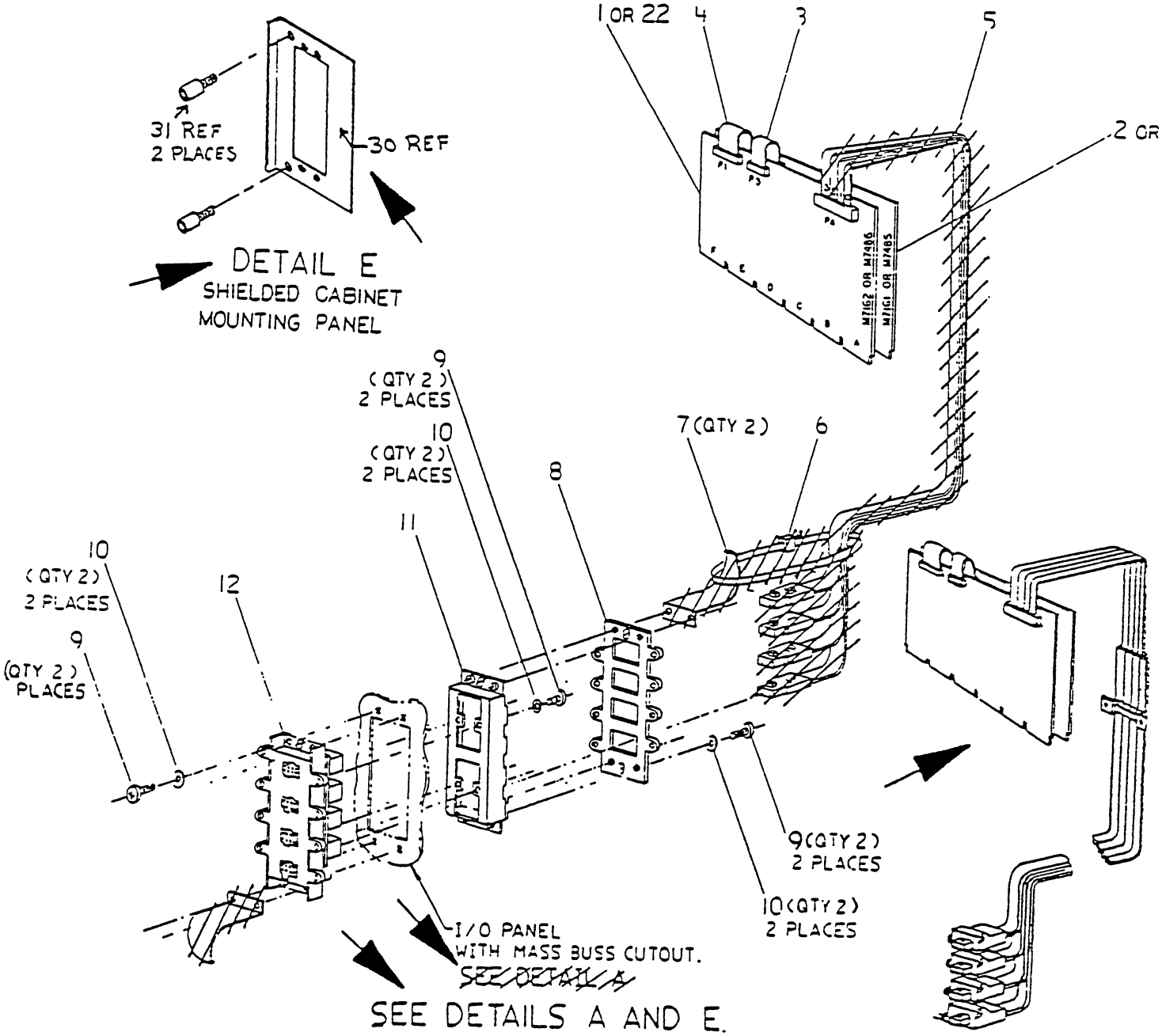

CTL #: 1664 EEEEEE CCCCC 0000 E C 0 0 EEEE C 0 0 E C 0 0 EEEEEE CCCCC 0000	ECO No: UDA50-CX004 d i s i t a l ENGINEERING CHANGE ORDER

ADAPTER, UNIBUS DISK
D-UA-UDA50-0-0
SHEET 1 of 5
ZONE: C,D-2,3

LEGEND	
PART NO	VARIATION
UDA50-00	ADAPTER,UNIBUS DISK
UDA50-A	ADAPTER,UNIBUS DISK

NOTES:

1. DO NOT ASSEMBLE ITEMS 6 THRU 12. THIS WILL BE FIELD INSTALLED IN AN EXISTING I/O BULKHEAD WITH AVAILABLE MASS BUSS CUTOUT.
2. PROPERLY BAG AND TAG ITEMS FOR SHIPMENT.
3. FOR SPECIFICATIONS, INSTALLATION AND/OR PROCEDURE REFER TO THE UDA50 DISK CONTROLLER USERS GUIDE P/N. EK-UDA50-UG.
4. ITEM 14 (BOOTSTRAP ROM) IS FOR USE IN M9312 MODULE WHEN APPLICABLE, IN PDP/11 CPU'S.
5. ITEM 19 (BOOTSTRAP ROM) IS FOR USE IN CPU MEMORY CONTROLLER MODULE WHEN APPLICABLE IN THE 11/750 CPU'S.
6. FOR ONE UDA50 ASSEMBLY USE "A" HOLES. WHEN TWO UDA50 ASSEMBLIES ARE INSTALLED, USE "A" HOLES ON LEFT BRACKET (PHANTOM VIEW, DETAIL D) AND "B" HOLES ON RIGHT BRACKET.

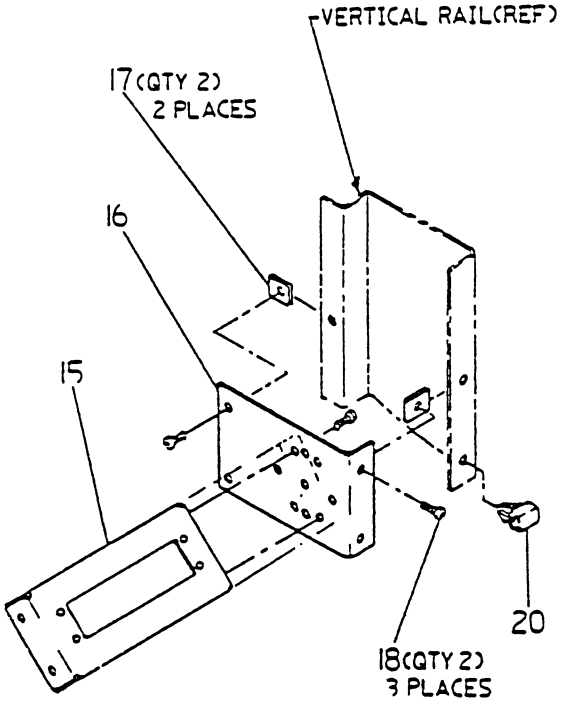

OPTIONAL MOUNTING
DETAIL A
FOR CABINET INSTALLATIONS
WITHOUT EXISTING MASS
BUSS I/O PANEL CUTOUT

ADAPTER, UNIBUS DISK
D-UA-UDA50-0-0
SHEET 2 of 5

CONTINUATION SHEET

SHEET: 1 OF 14

ECO No: UDA50-CX 004

d i s t a l

ENGINEERING CHANGE ORDER

CTL #: 1664

EEEEEE CCCCC 0000
E C 0 0
EEEE C 0 0

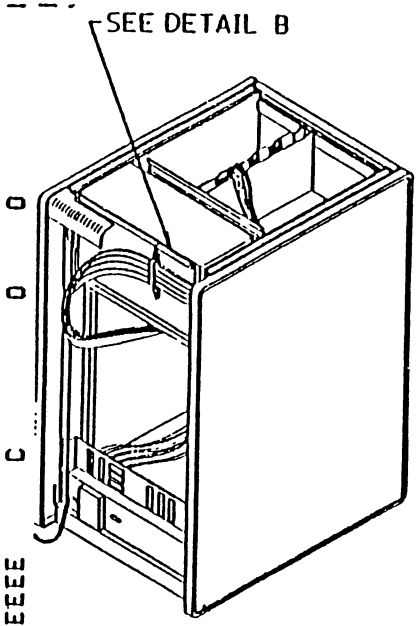

UNSHIELDED CABINET

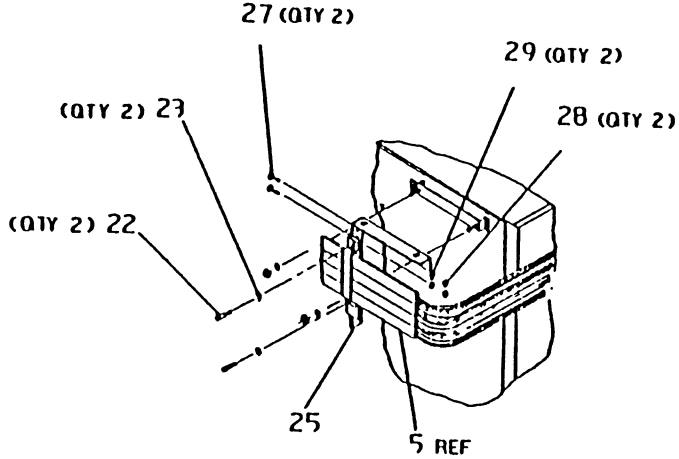

DETAIL B

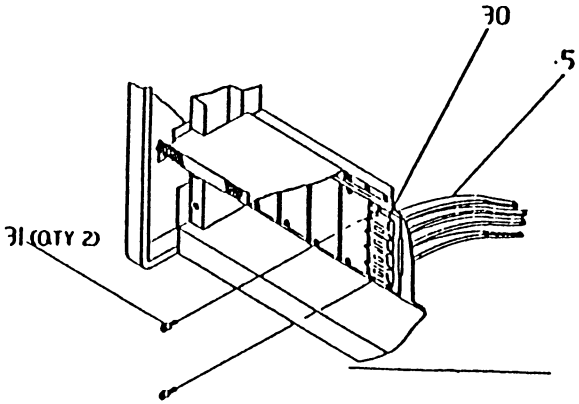

I/O PANEL, SHIELDED CABINET

UDA50 INSTALLATION INTO
11/44 AND 11X44 SHIELDED
AND UNSHIELDED CABINETS

CONTINUATION SHEET

CTL #: 1664 EEEEEE CCCCC 0000 E C O O EEEE C O O E C O O EEEEEE CCCCC 0000	ECO No: UDA50-CX004 d i s i t a l ENGINEERING CHANGE ORDER

ADAPTER, UNIBUS DISK
D-UA-UDA50-0-0
SHEET 3 of 5

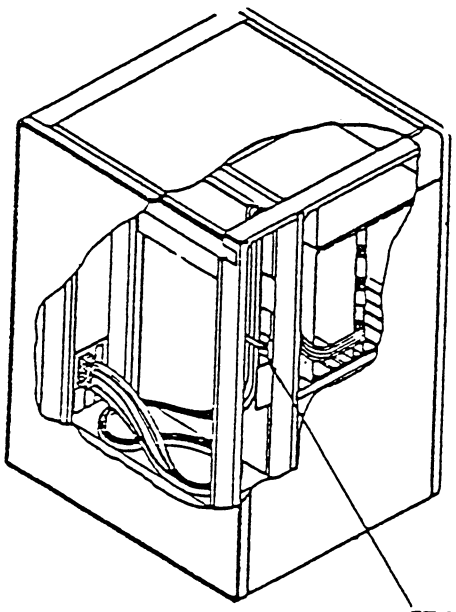

CABINET, UNSHIELDED

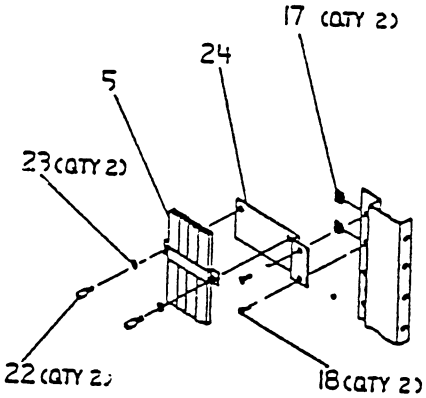

DETAIL C

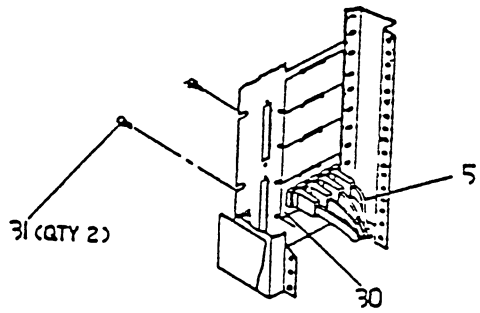

I/O PANEL, SHIELDED CABINET

UDA50 INSTALLATION INTO
11/750 CABINET, SHIELDED
AND UNSHIEDED

ECO No: UDA50-CX004

d i s t a l

ENGINEERING CHANGE ORDER

ADAPTER, UNIBUS DISK
D-UA-UDA50-0-0
SHEET 4 of 5

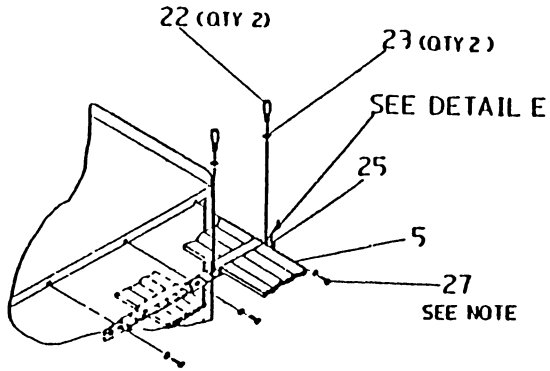

DETAIL D

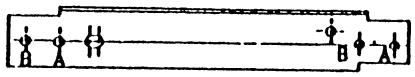

DETAIL E
SEE NOTE 6

CTL #: 1664

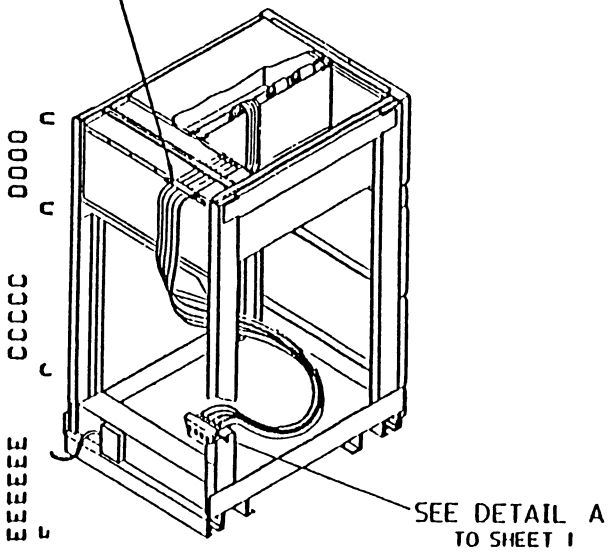

EXPANDER CABINET
UNSHIELDED

UDA50 INSTALLATION INTO
11/750 EXPANDER CABINET,
SHIELDED AND UNSHIELDED

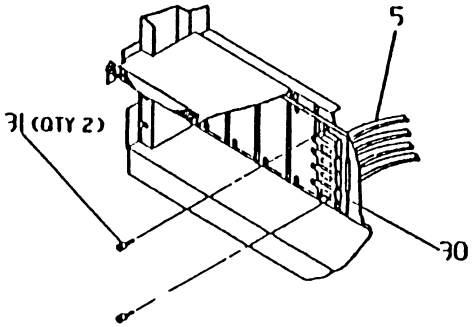

MOUNTING PLATE, I/O PANEL OF
SHIELDED CABINET

CONTINUATION SHEET

CTL #: 1664

ECO No: UDA50-CX 004

CHANGE ORDER

ADAPTER, UNIBUS DISK
D-UA-UDA50-0-0
SHEET 5 of 5

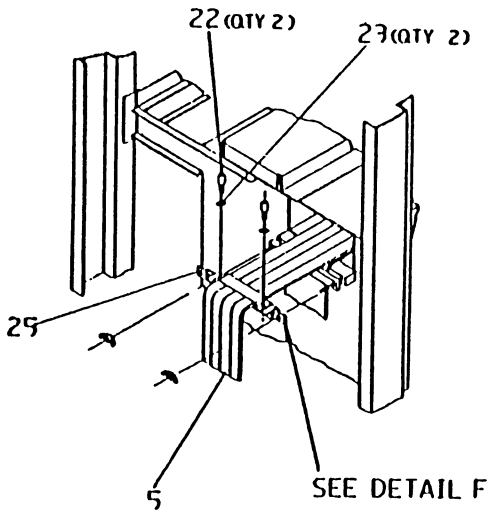

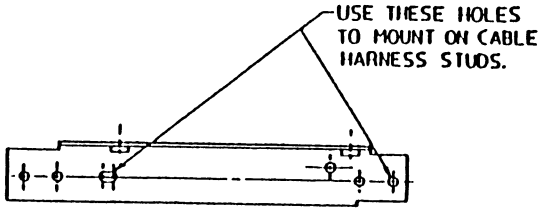

DETAIL F

UDA 50 INSTALLATION INTO
11/40 AND 11/70 CABINET.
FOR BULKHEAD MOUNTING, SEE DETAIL A
SHEET 1